vision solution

Specification

SBS-SCJ228-0.3

High Resolution Double Telecentric Lens

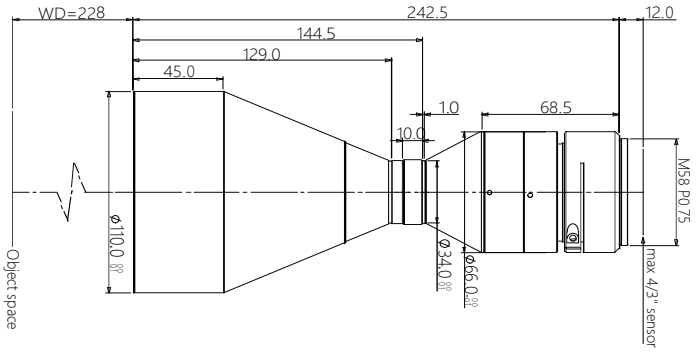

Features (SBS-SCJ series)

* Excellent double telecentric design for high resolution image result.
* Field of view is from 26mm to 300mm, suitable for most of application.
* Big Iris, low distortion, high parallel degree, big depth of view.
* Sensor size is available for 1/2.5″ 1/2″ 1/1.8″ 2/3″ 1″ 4/3″ 1.75″ 2″Φ39 35mm full.

Parameters

FOV (Dia.mm)	80
Mag.(x)	0.300
WD (mm)	228±4
Sensor size (Dia.mm)	24(4/3")
Image F#	7.5
Image MTF30(pl/mm)	>120
Object DOF (mm)	±7.1@F16
Object distortion (%)	<0.1
Object telecentric degree	<0.1
Object I/O(mm)	483±4

Mechanical

Mount	M42/M48/M58
Total length (mm)	242.5
N.W(KG)	2.4

Field of View (mm x mm)

4/3" Keyence 21M (17.86x14.32)	59.5x47.7
4/3" PYTHON 12K (18.43x13.82)	61.4x46.1
4/3" CMV8000 (18.48x13.73)	61.6x45.8